ZANUSSI PROFESSIONAL

# Standard Preparation 1100 mm Work Table

**ITEM #** _____

**MODEL #** _____

**NAME #** _____

**SIS #** _____

**AIA #** _____

**133219 (TG1100N)** Work table 1100 mm

## Short Form Specification

**Item No.** _____

The 50mm high worktop in 304 AISI stainless steel, 1mm in thickness, has upturned edges and incorporates a layer of sound deadening, waterproof and fireproof material. Square section legs 40x40mm on 1" height-adjustable feet in 304 AISI stainless steel.

**APPROVAL:** _____

## Main Features

- Ideal for central positioning in the kitchen, either as island installation or back to back.

## Construction

- 50 mm worktop in 304 AISI stainless steel, 10/10 in thickness with upturned edges and reinforced waterproof underpanel, incorporates a layer of sound deadening materials.
- 400 or 600 mm wide single drawer, chest of 4 drawers, lower shelf, three-sided underframe and set of castors as alternative to the feet, can be fitted as optional on all work tables.
- 40 mm-thick lower shelf (available as optional accessory on some models) slots easily into place at a height of 200 mm from the floor. Lower shelf is compulsory to install the chest of drawers.
- Square section legs and 40 mm height-adjustable feet in 304 AISI stainless steel.
- Table top slots into legs without using screws to facilitate installation.

## Optional Accessories

- Set of 4 wheels (2 with brake) d. 100mm for tables and sinks (total height on wheels= 993 mm) — PNC 855150 ❑
- Single drawer GN 1/1, 400mm — PNC 855280 ❑
- Single drawer, 600mm — PNC 855281 ❑
- Additional drawer, 600mm (to set up a chest of 2, 3, 4 drawers) — PNC 855295 ❑
- Additional drawer GN 1/1, 400mm (to set up a chest of 2, 3, 4 drawers) — PNC 855298 ❑
- Lower shelf for 1100 mm tables and sinks — PNC 855349 ❑
- 3-sided underframe for 1100mm tables — PNC 855356 ❑

# Standard Preparation 1100 mm Work Table

**Front**

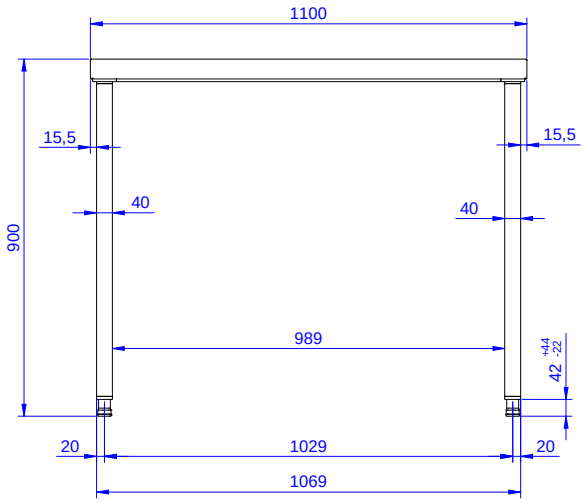


**Side**

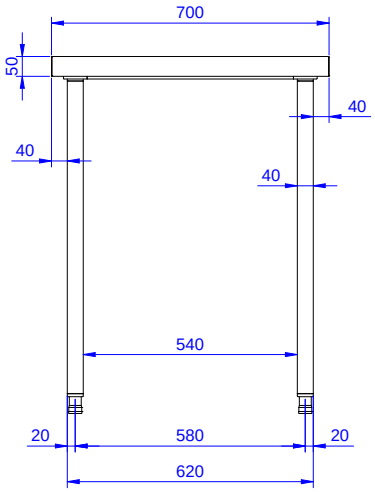


**Top**

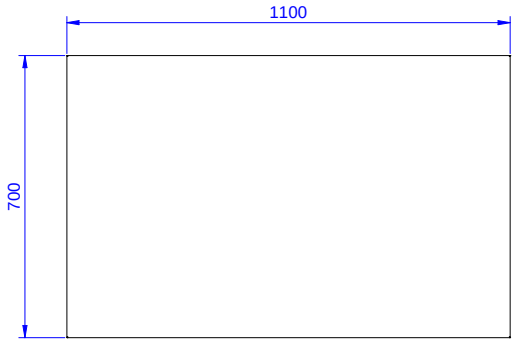


## Key Information:

| | |
|---|---|
| **External dimensions, Width:** | |
| **133219 (TG1100N)** | 1100 mm |
| **External dimensions, Depth:** | 700 mm |
| **External dimensions, Height:** | 900 mm |
| **Worktop thickness:** | 50 mm |
| **Net weight:** | 37 kg |



The company reserves the right to make modifications to the products without prior notice. All information correct at time of printing.

2024.10.09